Multiturn	Sendix absolute	F3668 / F3688 (Shaft / Hollow shaft)	CANopen

The Sendix F36 multiturn is an optical multiturn encoder without gears, 100% insensitive to magnetic fields, in miniature format.

With a size of just 36 x 42 mm it offers a shaft or a blind hollow shaft of up to 10 mm.

CANopen 2/22 c UL us pending RoHS

Safety-Lock™ | High rotational speed | Temperature | High IP value | High shaft load capacity | Shock / vibration resistant | Magnetic field proof | Short-circuit proof | Reverse polarity protection

Reliable and magnetically insensitive

- Electronic multiturn 100 % magnetic-field resistant
- Sturdy bearing construction in Safety Lock™ Design for resistance against vibration and installation errors
- Reduced number of components ensures magnetic insensitivity
- Ideal for use outdoors thanks to IP 67 protection and wide temperature range from -40°C up to +85°C

Up-to-the-minute Fieldbus performance

- CANopen with current encoder profile
- LSS services for configuration of the node address and baud rate
- Variable PDO mapping in the memory

Order code Shaft version

8.F3668 . XX2X . 21 1 2
Type ❶❷❸❹ ❺

10 by 10

❶ **Flange, ø 36 mm**
1 = Clamping flange, IP67
2 = Synchro flange, IP67
3 = Clamping flange, IP65
4 = Synchro flange, IP65

❷ **Shaft (ø x L)**
1 = 6 x 12,5 mm
2 = 6,35 x 12,5mm
3 = 8 x 15 mm
4 = 9,525 x 15,875 mm
5 = 10 x 20 mm

❸ **Interface / Power supply**
2 = CANopen DS301 V4.0, 10 ... 30 V DC

❹ **Type of connection**
1 = Cable, tangential (1 m PUR)
3 = Cable, tangential (5 m PUR)

❺ **Fieldbus profile**
21 = CANopen Encoder profile DS406 V3.1

Preferred types are underlined

Order code Hollow shaft

8.F3688 . XX2X . 21 1 2
Type ❶❷❸❹ ❺

10 by 10

❶ **Flange**
ø 36 mm, IP65
1 = with torque stop
2 = with stator coupling

❷ **Blind hollow shaft**
4 = 10 mm
5 = 6 mm
6 = 6,35 mm
7 = 8 mm

❸ **Interface / Power supply**
2 = CANopen DS301 V4.0, 10 ... 30 V DC

❹ **Type of connection**
1 = Cable, tangential (1 m PUR)
3 = Cable, tangential (5 m PUR)

❺ **Fieldbus profile**
21 = CANopen Encoder profile DS406 V3.1

Preferred types are underlined

Suitable accessories:
– further cables and connectors, also pre-assembled, can be found in the Connection Technology section.
– further mounting attachments and stator couplings can be found in the Accessories section.

Multiturn	Sendix absolute	F3668 / F3688 (Shaft / Hollow shaft)	CANopen

Mechanical characteristics:

Maximum speed		
Shaft- or blind hollow shaft version without shaft seal (IP65)		12 000 min-1 10 000 min-1 (continuous op.)
Shaft version (IP 67) or hollow shaft version (IP 65) with shaft seal		10 000 min-1 8 000 min-1 (continuous op.)
Starting torque	without shaft seal with shaft seal (IP67)	< 0,007 Nm < 0,01 Nm
Shaft load capacity	radial axial	40 N 20 N
Weight		ca. 0,2 kg
Protection to EN 60 529	housing side shaft side	IP 67 IP 65 (solid shaft version opt. IP 67)
EX approval for hazardous areas		optional Zone 2 and 22
Working temperature range		-40°C ... +85°C
Materials	shaft/hollow shaft flange housing cable	stainless steel aluminium zinc die-cast PUR
Shock resistance acc. to DIN-IEC 68-2-27		> 2500 m/s², 6 ms
Vibration resistance acc. to DIN-IEC 68-2-6		> 100 m/s², 55 ... 2000 Hz

Diagnostic LED (two-colour, red/green)

LED ON or blinking	**red**	Error display
	green	Status display

General electrical characteristics:

Supply voltage		10 ... 30 V DC
Current consumption (no load)	24 V DC	max. 60 mA
Reverse connection of the supply voltage (U_b)		yes
RoHS compliant acc. to		EG-guideline 2002/95/EG
CE compliant acc. to		EN 61000-6-2, EN 61000-6-4, and EN 61000-6-3

Interface characteristics CANopen

Resolution Singleturn	1 ... 65536 (16 bit), scaleable:: 1 ... 65536
Default value Singleturn	8192 (13 bit)
Total resolution	1 ... 4.294.967.296 (32 bit) Default: 25 bit
Code	Binary
Interface	CAN High-Speed according to ISO 11898, Basic- and Full-CAN, CAN Specification 2.0 B
Protocol	CANopen profile DS 406 V3.1 with manufacturer-specific add-ons LSS-Service DS305 V2.0
Baud rate	10 ... 1000 kbit/s (Software configurable)
Node address	1 ... 127 (Software configurable)
Termination switchable	Software configurable
LSS Protocol	CIA LSS protocol DS305 Global command support for node address and baud rate. Selective commands via attributes of the identity object

General information about CANopen

The CANopen encoders of the M3658 and M3678 series support the latest CANopen communication profile according to DS 301 V4.02 . In addition, device-specific profiles like the encoder profile DS 406 V3.1 are available.

The following operating modes may be selected: Polled Mode, Cyclic Mode, Sync Mode. Moreover, scale factors, preset values, limit switch values and many other additional parameters can be programmed via the CAN-Bus. When switching the device on, all parameters, which have been saved on a flash memory to protect them against power failure, are loaded again.

The following output values may be combined in a freely variable way as PDO (PDO mapping): **position**, **speed** as well as the **status of the working area**.

The encoders are available with a connector or a cable connection. The device address and baud rate can be set/modified by means of the software. The two-colour LED located on the back indicates the operating or fault status of the CAN bus, as well as the status of the internal diagnostics. Node address, baud rate and CANbus termination are programmable.

CANopen Encoder Profile DS406 V3.1

The following parameters can be programmed:

- Event mode
- 1 work area with upper and lower limit and the corresponding output states
- Variable PDO mapping for position, speed, work area status
- Extended failure management for position sensing with integrated temperature control
- User interface with visual display of bus and failure status 1 LED two colours
- Customer-specific memory - 16 Bytes

"Watchdog controlled" device

CANopen Communication Profile DS301 V4.02

Among others, the following functionality is integrated. Class C2 functionality:

- NMT Slave
- Heartbeat Protocol
- Identity Object
- Error Behaviour Object
- Variable PDO Mapping self-start programmable (Power on to operational), 3 Sending PDO's
- Node address, baud rate and CANbus / Programmable termination

LSS Layer Setting Services DS305 V2.0

- Global support of Node-ID and baud rate
- Selective protocol via identity object (1018h)

Terminal assignment

Signal:	+Ub	0 V	CAN GND	CAN High	CAN Low
Cable colour:	BN	WH	GY	GN	YE

Dimensions shaft version:

Synchro flange, ø 36 mm

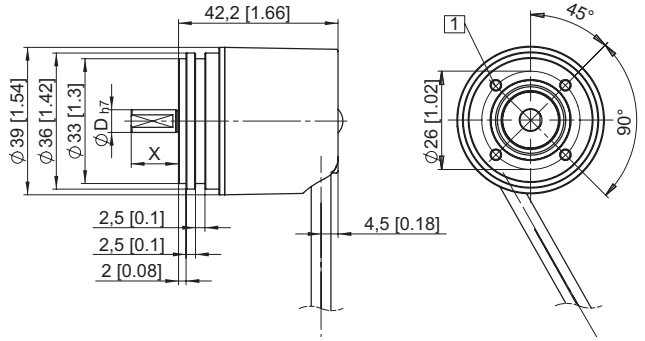

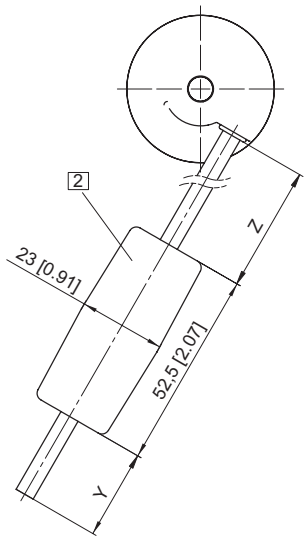

Clamping flange, ø 36 mm

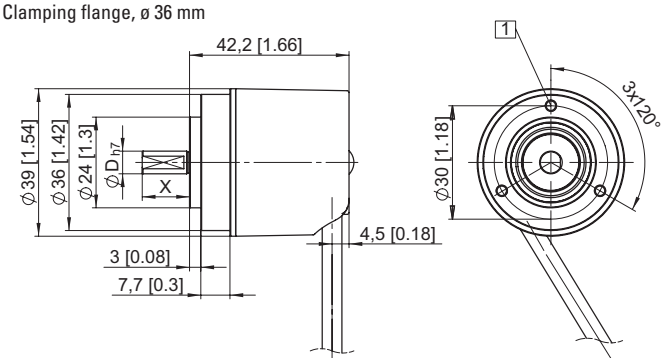

1 M3, 6 [0.24] deep

2 Battery (in the cable)

Y	Z
1 m	150 mm
5 m	150 mm

Dimensions hollow shaft version:

with torque stop, ø 36 mm

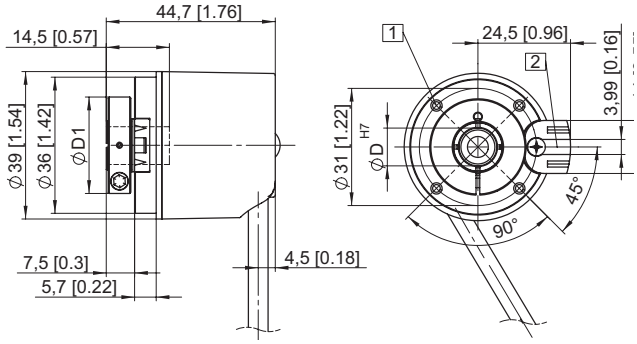

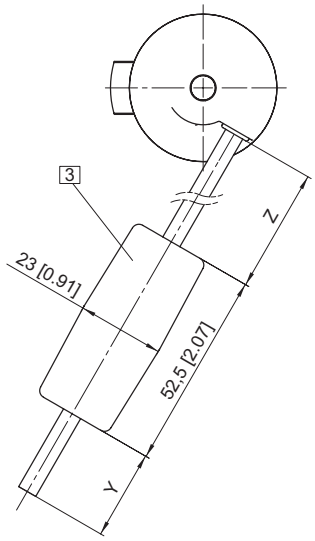

with stator coupling, ø 36 mm

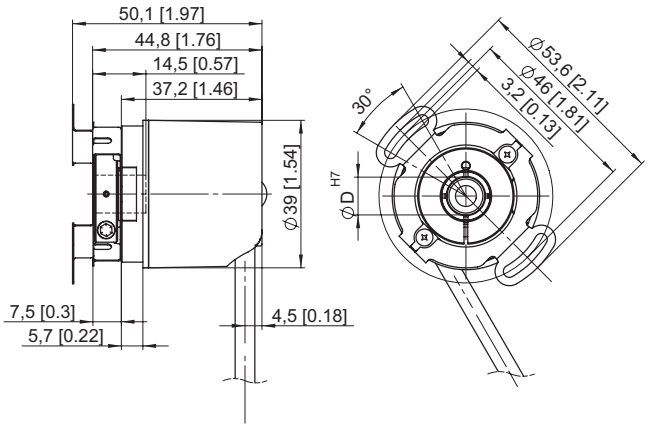

1 M2.5, 5 [0.2] deep

2 Torque stop slot
Recommendation:
Cylindrical pin DIN7, Ø 4

3 Battery (in the cable)

Hollow shaft acc. to order code	D1
1	ø 24 mm
2	ø 24 mm
3	ø 25,5 mm
4	ø 25,5 mm

Y	Z
1 m	150 mm
5 m	150 mm